IHP-4

24" (4) Open Burner Hot Plate

The Inferno hot plate is constructed with heavy duty stainless steel, cast iron grates and 28,000 BTU lift-off anti-clogging cast iron burners. All hot plates come standard in natural gas and are field convertible to liquid propane with the included conversion kit.



Features

- Four 28,000 BTU/hr burners
- Anti-clogging lift-off cast iron burners
- Full length removable crumb tray
- Shielded pilot light to protect from spills
- 1-year parts and labour warranty

Technical Specifications

- Stainless steel exterior
- Natural gas standard
- Liquid propane conversion kit included
- 3/4" gas inlet

IHP-4

24" (4) Open Burner Hot Plate

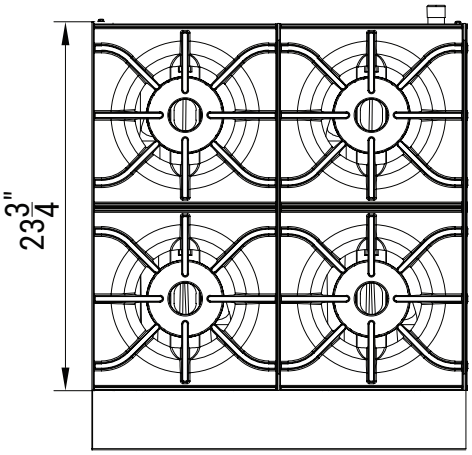

TOP

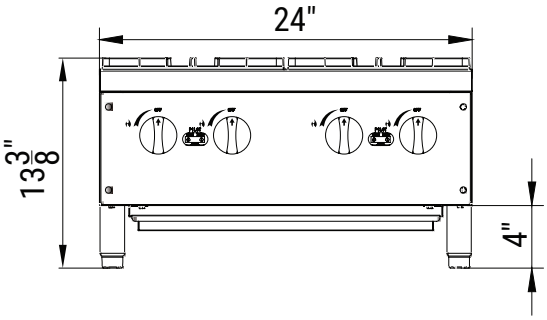

FRONT

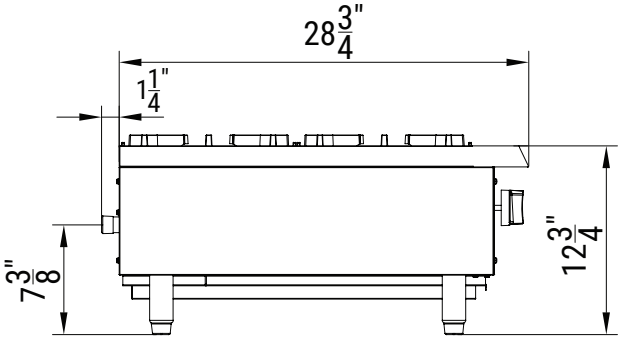

LEFT

Model	External Dimensions (inches)			Crated Dimensions (inches)			Net Weight	Gross Weight	Gas Source	Burner Count	Single Burner	Total Output (BTU)	Orifice Size	Gas Pressure
	W	D	H	W	D	H								
IHP-4	24	28 3/4	13 3/8	26 1/8	32 5/8	17 3/4	110	143	LPG	4	28000	112000	52	10 in. WC
									NAT	4	28000	112000	40	4 in. WC

Specifications are subject to change without notice.

© 2026 by Riccio Group Inc.

461 North Service Road West Units B38 & B39 Oakville, ON L6M 2V5 T: 905.339.5119 glacier-inferno.com