IRB-24

24" Broiler

Inferno broilers feature an innovative design with heavy duty cast iron top grates. Cast "V" shaped radiants deflect heat and minimize excessive flare up. The full size stainless steel drip tray is removable for easy cleaning. Individually controlled 35,000 BTU burners are placed every 12" to provide complete coverage and even heat distribution. All charbroilers come standard in natural gas and are field convertible to liquid propane with the included conversion kit.



Features

- Heavy duty cast iron top grates
- Cast “V” shaped radiants to prevent clogged burners
- Double wall insulated cool-to-the-touch sides
- Full sized stainless steel removable drip tray
- 2 individually controlled 35,000 BTU/hr burners located every 12”
- 1-year parts and labour warranty

Technical Specifications

- Stainless steel exterior
- Natural gas standard
- Liquid propane conversion kit included
- 3/4" gas inlet

IRB-24

24" Broiler

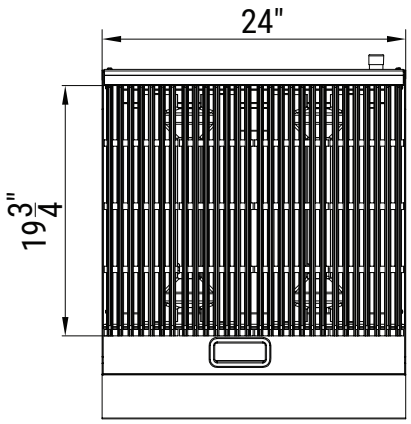

TOP

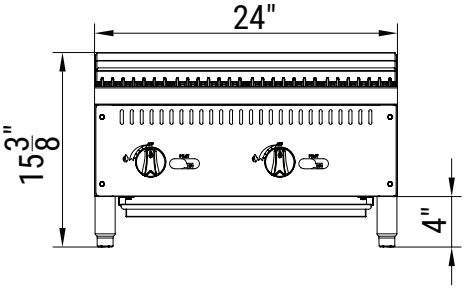

FRONT

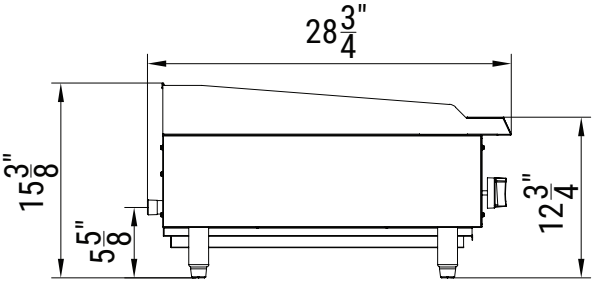

LEFT

Model	External Dimensions (inches)			Crated Dimensions (inches)			Net Weight	Gross Weight	Gas Source	Burner Count	Single Burner	Total Output (BTU)	Orifice Size	Gas Pressure
	W	D	H	W	D	H								
IRB-24	24	28 3/4	15 3/8	26 1/8	32 5/8	20 1/4	132	154	LPG	2	35000	70000	49	10 in. WC
									NAT	2	35000	70000	34	4 in. WC

Specifications are subject to change without notice.

© 2026 by Riccio Group Inc.

461 North Service Road West Units B38 & B39 Oakville, ON L6M 2V5 T: 905.339.5119 glacier-inferno.com